VICAN PUMP - DIMENSIONAL DRAWING

Pump Series: 332

Models: Q-332, M-332, N-332, R-332

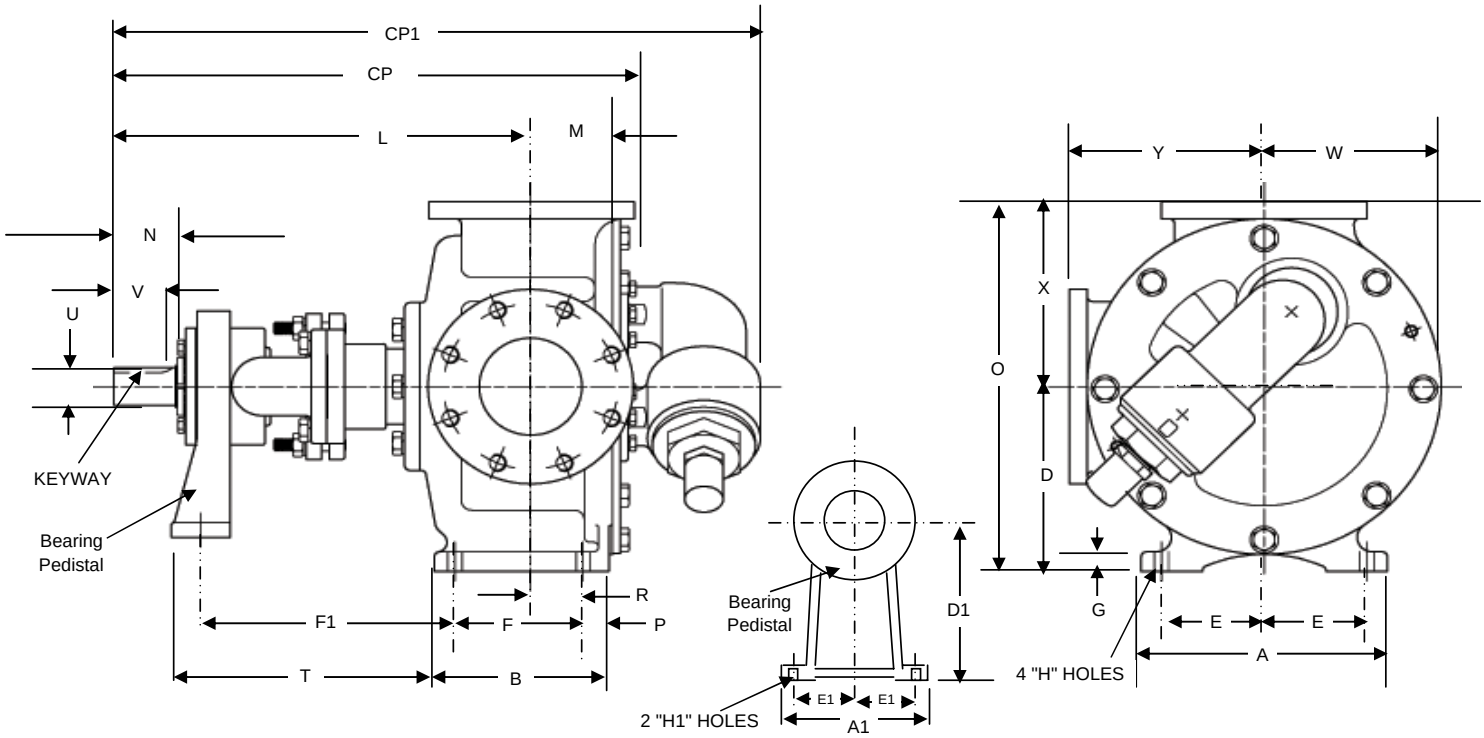

Model Number	Port Size	DM	A	B	CP	CP1	D	E	F	G	H	L	M	N	O	P	R	T	U	V	W	X	Y	Keyway	Approx Ship. Wt.
Q-332	4" ANSI Flanged	in.	10.0	6.5	26.75	31.25	7.75	4.12	4.25	0.62	0.65	20.81	3.0	3.0	15.88	1.38	1.38	14.31	1.937	2.88	7.0	8.12	8.12	.500 X .250	410 lbs.
		mm	254	165	680	794	197	105	108	16	17	529	76	76	403	0.35	35	364	49	73	178	206	206	13 X 6	186 kg
M-332	4" ANSI Flanged	in.	12.0	8.5	26.75	31.5	9.5	5.0	6.25	0.75	0.65	20.31	4.0	3.0	19.0	1.25	2.56	12.81	1.937	2.88	8.62	9.5	9.5	.500 X .250	490 lbs.
		mm	305	216	680	800	241	127	159	19	17	516	102	76	483	32	65	325	49	73	219	241	241	13 X 6	222 kg
N-332	5" ANSI Flanged	in.	12.0	8.5	37.38	42.25	9.5	5.0	6.25	1.0	0.65	30.5	4.5	4.0	19.0	1.44	2.88	22.12	2.437	3.0	8.62	9.5	9.5	.625 X .312	850 lbs.
		mm	305	216	949	1073	241	127	159	25	17	775	114	102	483	37	73	562	62	76	219	241	241	16 X 8	386 kg
R-332	6" ANSI Flanged	in.	16.0	10.31	40.0	49.0	13.3	6.75	7.0	1.0	0.78	31.12	5.62	4.0	26.5	2.06	3.31	21.94	2.437	3.0	12.25	13.25	13.25	.625 X .312	1400 lbs.
		mm	406	262	1016	1245	337	171	178	25	20	791	143	102	673	52	84	557	62	76	311	337	337	16 X 8	635 kg

Bearing Pedistal

Model Number	DM	A1	D1	E1	F1	H1
Q-332	in.	10.0	7.75	4.12	13.75	0.65
	mm	254	197	105	349	16.5
M-332	in.	12.0	7.75	4.12	12.38	0.65
	mm	305	197	105	314	16.5
N-332	in.	12.0	9.5	5.25	21.5	0.69
	mm	305	241	133	546	17.5
R-332	in.	16.0	9.5	5.25	21.75	0.69
	mm	406	241	133	552	17.5

- Series 332 pumps have Flanged Suction and Discharge connections suitable for use with 125# or 150# ANSI Flanges and Fittings.
- If optional Left Hand Casing required, please specify when ordering.
- For Steam/Oil Jacketed features refer to 260 Series Pumps
- Optional Shaft lengths can be provided to accomidate drives when required. Dimensions 'N' and 'V' (Keyway length) will change.

ALL DIMENSIONS ARE APPROXIMATE
FOR EXACT INSTALLATION DATA, CERTIFIED PRINTS WILL BE SUPPLIED ON REQUEST

VICAN PUMP, A UNIT OF IDEX CORPORATION, 661 Grove Ave., Windsor, Ontario, N9A 6M3, Canada